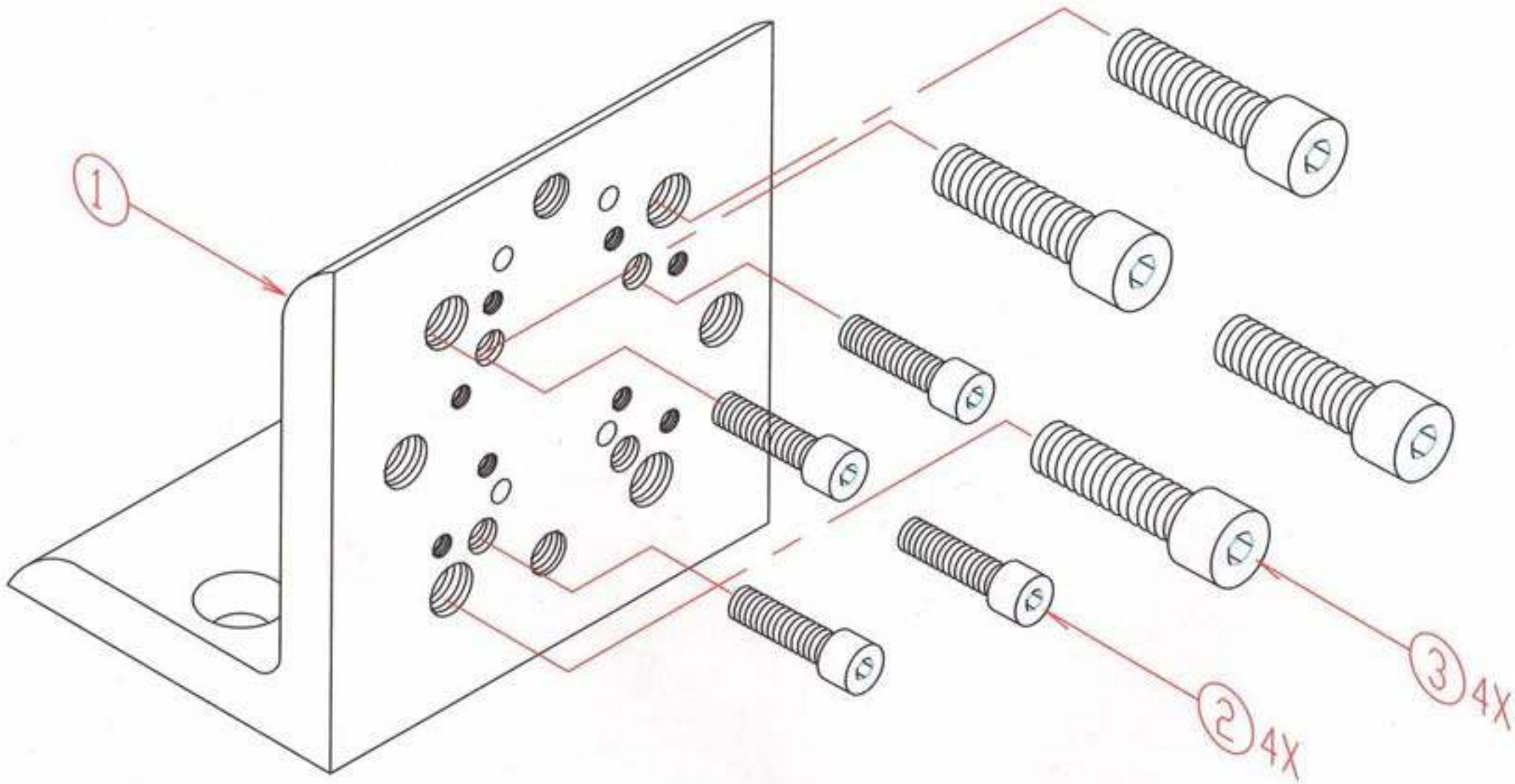

NOTES: UNLESS OTHERWISE SPECIFIED

1. PLACE SCREWS AS SHOWN IN PLASTIC BAG, ITEM 4, PROVIDED.
   PLACE IN BOX, ITEM 5, AS LISTED ON BOM. APPLY SHIPPING LABEL TO OUTSIDE OF BOX.

REV	DATE	DESCRIPTION	INIT
N	4/20/06	ECO 2049	DK

SEE SEPARATE BOM

PRODUCT: BMX

MOUNTING BRACKET
MB-1

SHEET 1 OF 1 | CLASS A | P/N-S/N 062109 | REV N

THIS DRAWING CONTAINS PROPRIETARY INFORMATION WHICH MAY NOT BE RELEASED IN ANY FORM TO ANY PARTY WITHOUT PRIOR AUTHORIZATION

APPR'D	4/27/06	
CHK'D	4/26/06	
DRWN	D.KINTIS	4/20/06

NEXT ASSY | USED ON